NARROW-NECKED SLEEVES
ISO-EXO
TERMIK EXO 23 - EXO 25B - EXO 27

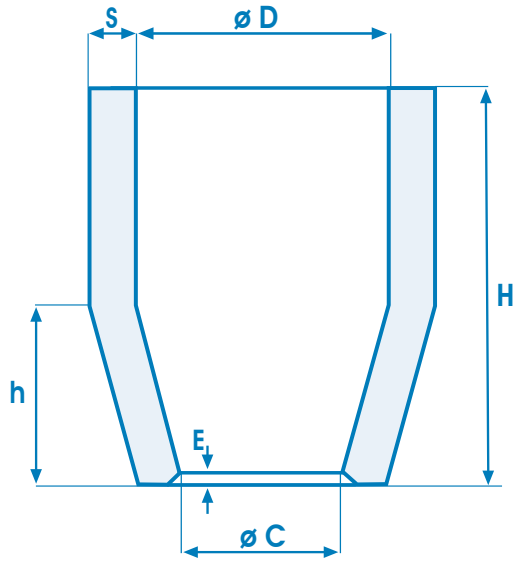

TYPE TXB

TYPE	D mm	C mm	E mm	S mm		H mm	h mm	Capacity dm³	Termik Modulus
				27	23 25B				
TXB120	120	84	3	18	15	180	54	1,87	2,90
TXB130	130	91	3	20	17	195	59	2,36	3,50
TXB140	140	98	3	21	17	210	63	2,96	3,80
TXB150	150	105	3	22	18	225	68	3,63	4,10
TXB160	160	112	3	23	19	240	72	4,41	4,40
TXB170	170	119	4	24	20	255	77	5,30	4,80
TXB180	180	126	4	25	21	270	81	6,29	5,20
TXB190	190	133	4	26	22	285	85	7,41	5,60
TXB200	200	140	5	27	23	300	90	8,64	5,90
TXB210	210	147	5	28	24	315	95	9,99	6,20
TXB220	220	154	5	29	25	330	99	11,49	6,50
TXB240	240	168	5	31	26	360	108	14,92	6,80

Date of issue
JULY 2015

Board authorization

TOLERANCES

DIMENSION	DIAMETER	THICKNESS	HEIGHT
30-100	± 5 mm	-2 mm	-10 mm
110-200	± 5 mm	-2 mm	-10 mm
220-300	± 5 mm	-3 mm	-10 mm