NARROW-NECKED SLEEVES
ISO-EXO
TERMIK EXO 23 - EXO 25B - EXO 27

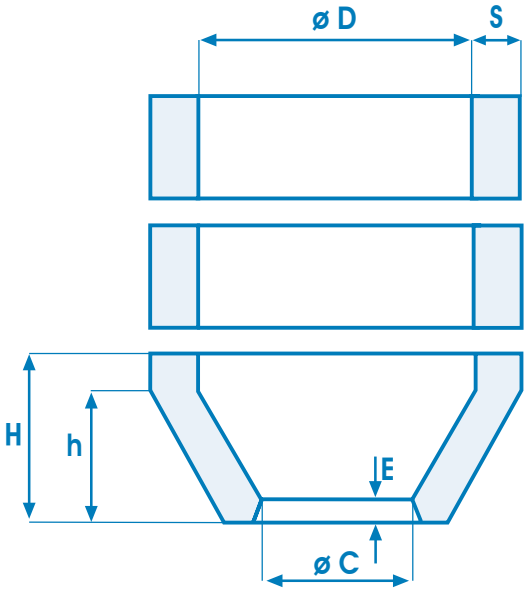

TYPE TX - MD

TYPE	D mm	C mm	S mm		E mm	H mm	h mm	Capacity dm³
			27	23 25B				
TXMD 12	400	195	40	33	8	200	165	15,90
TXMD 13	450	220	40	34	8	300	185	34,40
TXMD 14	500	295	40	35	8	300	160	47,00
TXMD 15	550	320	40	37	10	300	190	55,10
TXMD 16	600	345	45	38	10	300	245	64,30
TXMD 17	650	400	45	39	10	300	195	75,10
TXMD 18	700	450	45	40	10	300	215	84,50

Date of issue
JULY 2015

Board authorization

TOLERANCES

DIMENSION	DIAMETER	THICKNESS	HEIGHT
400-700	± 10 mm	-5 mm	-15 mm